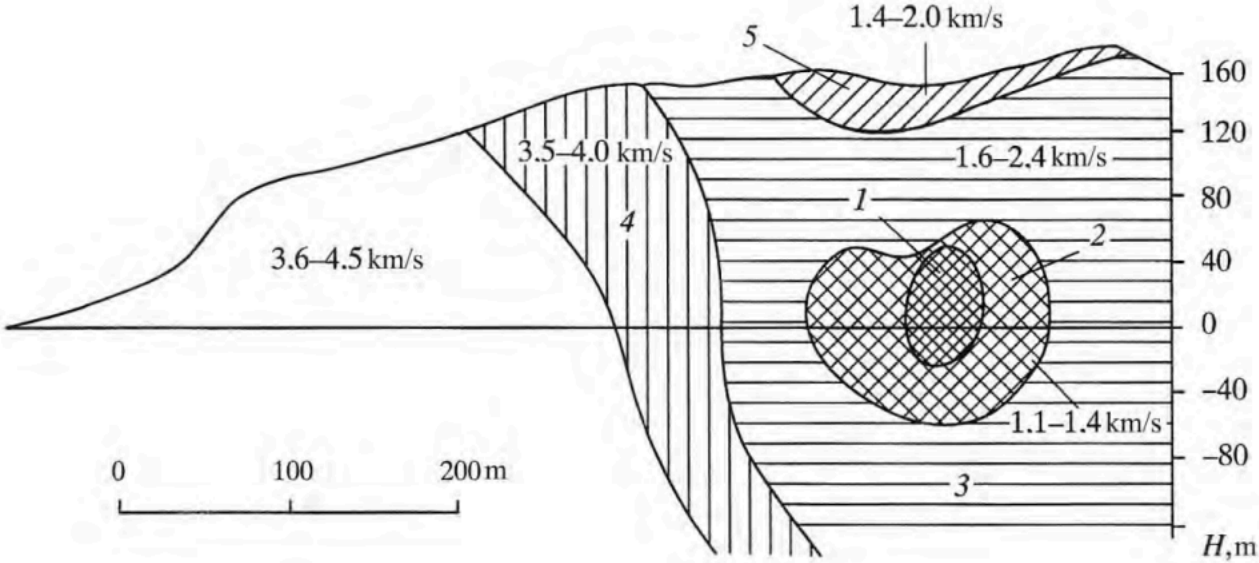

Figure 1.14 Results of the seismic imaging of the rock massif conducted after 12.5 kt explosion: *1* – cavity and chimney, *2* – crush zone, *3* – zone of inelastic deformations, *4* – zone of localized inelastic deformations. Seismic velocities are also shown in the cross-section.